Neutron magnetic storage and neutron lifetime measuring

Victor Ezhov
Petersburg Nuclear Physics Institute NRC KI

ISINN 2015
May 25-29, Dubna

Neutron magnetic storage

Magnetic mirrors, channels and bottles neutrons.
Vladimirskii, V.V. Sov. Phys. JETP 12, 740-746, (1961)

Magnetic potential

$$U = -\vec{\mu}\cdot\vec{B}$$

$$F = -\nabla U = \nabla(\vec{\mu}\cdot\vec{B}) = \pm\mu\nabla\left|\vec{B}\right|$$

\+ for $\vec{\mu}\uparrow\uparrow\vec{B}$ and

– for $\vec{\mu}\uparrow\downarrow\vec{B}$

For magnetic moment of neutron

$$U = 60neV\cdot T^{-1}$$

Nuclear potential of Be

$$250neV$$

Magnetic field 1 T reflects neutrons up to 3.4 m/s, as Al.

Magnetic trap: 1 T for trapping

Main problem: trap configuration

First real magnetic trap

Письма в ЖЭТФ, том 27, вып.1, стр. 70 – 73 *5 января 1978 г.*

ЭКСПЕРИМЕНТ ПО ХРАНЕНИЮ НЕЙТРОНОВ В МАГНИТНОЙ ЛОВУШКЕ

Ю.Ю.Косвинцев, Ю.А.Кушнир, В.И.Морозов
И.А.Плотников

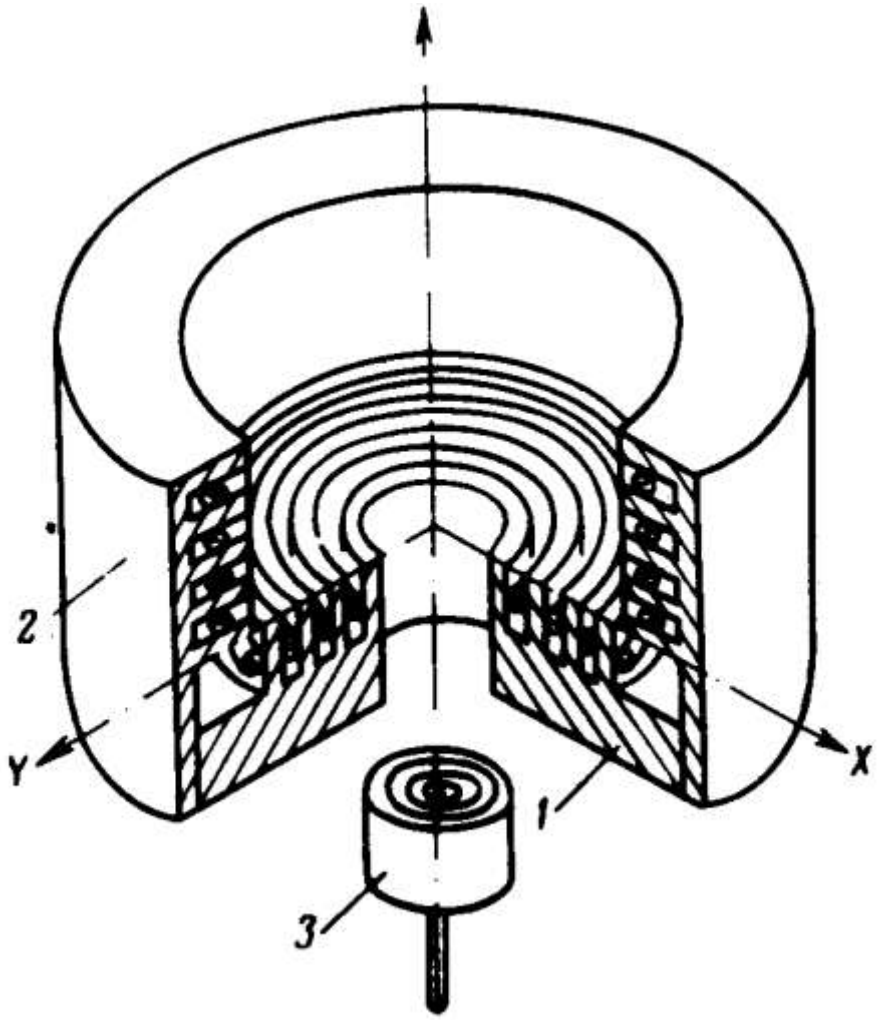

Reactor CM-2

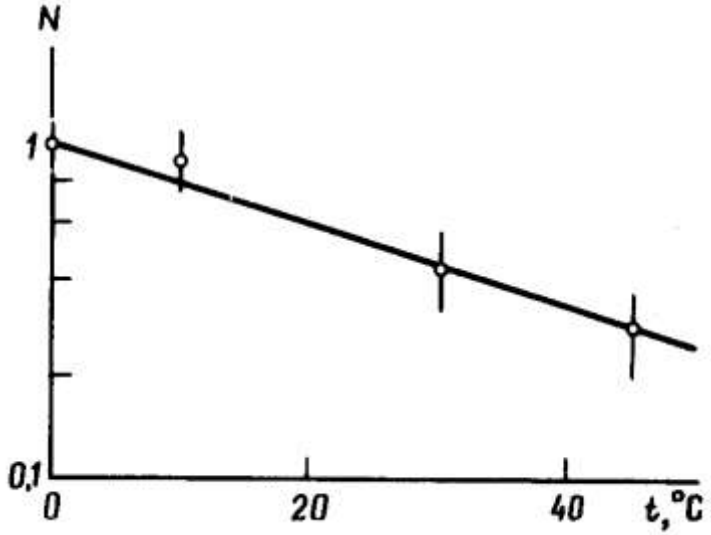

W=20 kW

Число накопленных в ловушке нейтронов 1,05 ± 0,15, время хранения 35 ± 10 *сек.*

Magneto-gravitational trap

Y.G.Abov, V.V.Vasil'ev, V.V.Vladimirski, I.B.Rozhnin
JETP Letters, 44(8), 369, (1986)

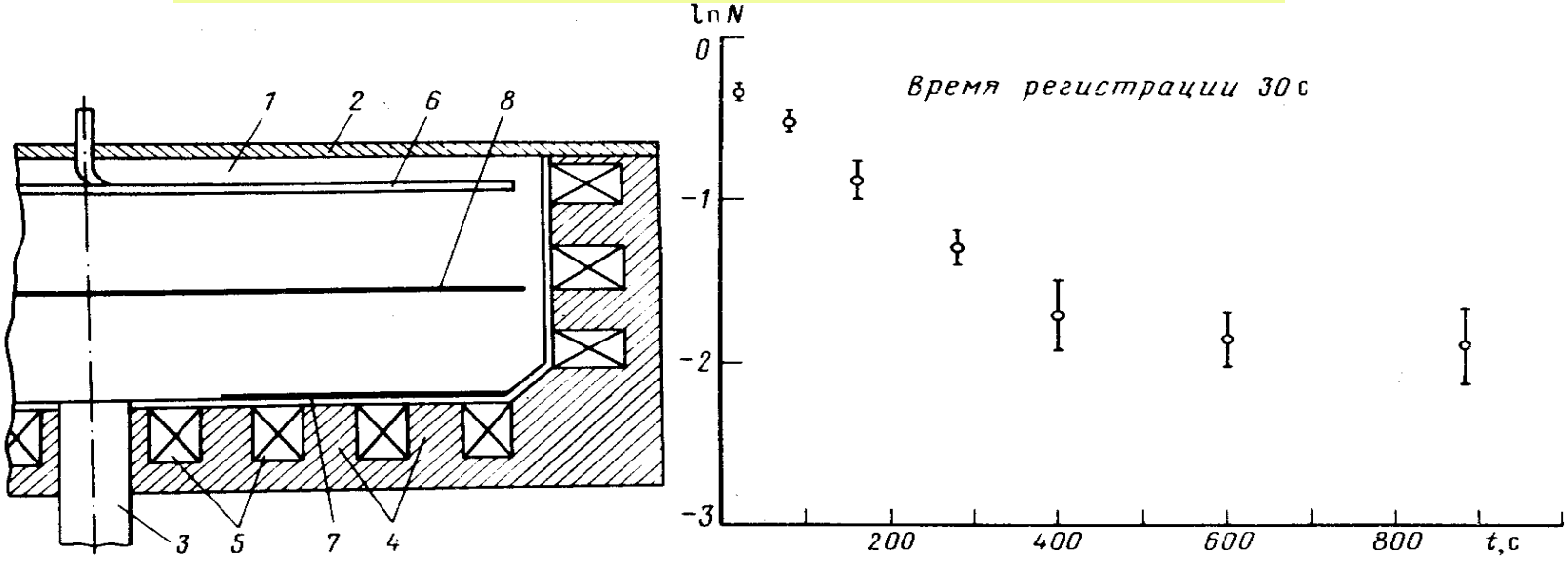

Рис. 1. Ма… …патрубок для инжек… …б – кор-ректирую…

Рис. 2. Зав… …и зареги-стрирован…

Main problem of the current systems is too large electric power (about 100 kWt)

Material magnetic shutter

Main result:
It was shown firstly that it's possible to obtain **τ > 700 sec** in the magneto-gravitational trap.

Ioffe-Pritchard trap for atoms

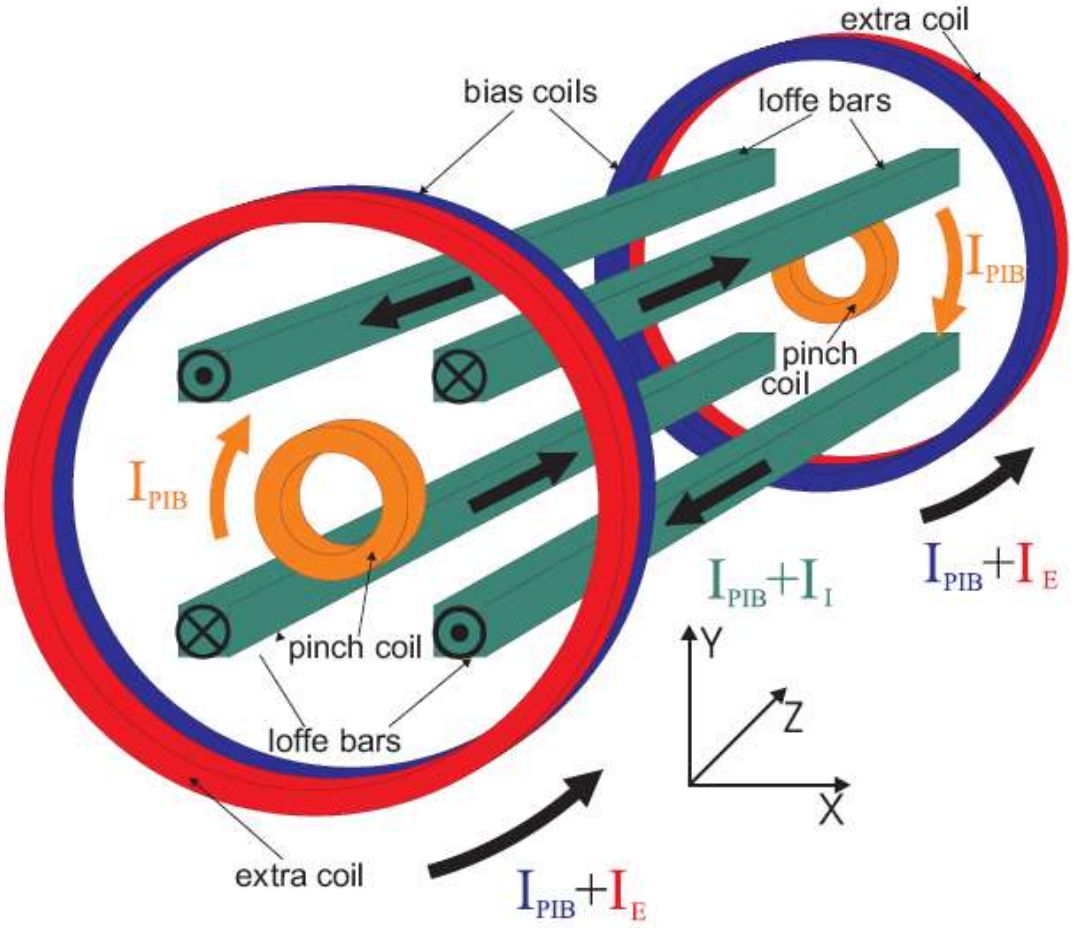

Fig. 3.4: Ioffe-Pritchard configuration of the elements creating the magnetic fields. The radial gradients are produced by the quadrupole field of the Ioffe bars, the axial by the dipole field of the pinch coils. The magnetic field offset generated by the pinch coils is compensated by the bias coils. The extra coils produce an adjustable offset field.

Ioffe-Pritchard trap for neutrons

The main problems:

1. Filling and empting. If one use superconducting system, then he can't switch on field too fast.
2. Huge setup and small storage volume
3. Field only 1 T

S.N. Dozhosuk *et al.*, J. Res. Natl. Inst. Stand. Technol. **110**, 339 (2005).

The trapping region is filled with superfluid ^{4}He, which is used to load neutrons into the trap and as a scintillator to detect their decay. Neutrons have a lifetime in the trap of

$$\tau = 833^{+74}_{-63}\ \mathrm{s}$$

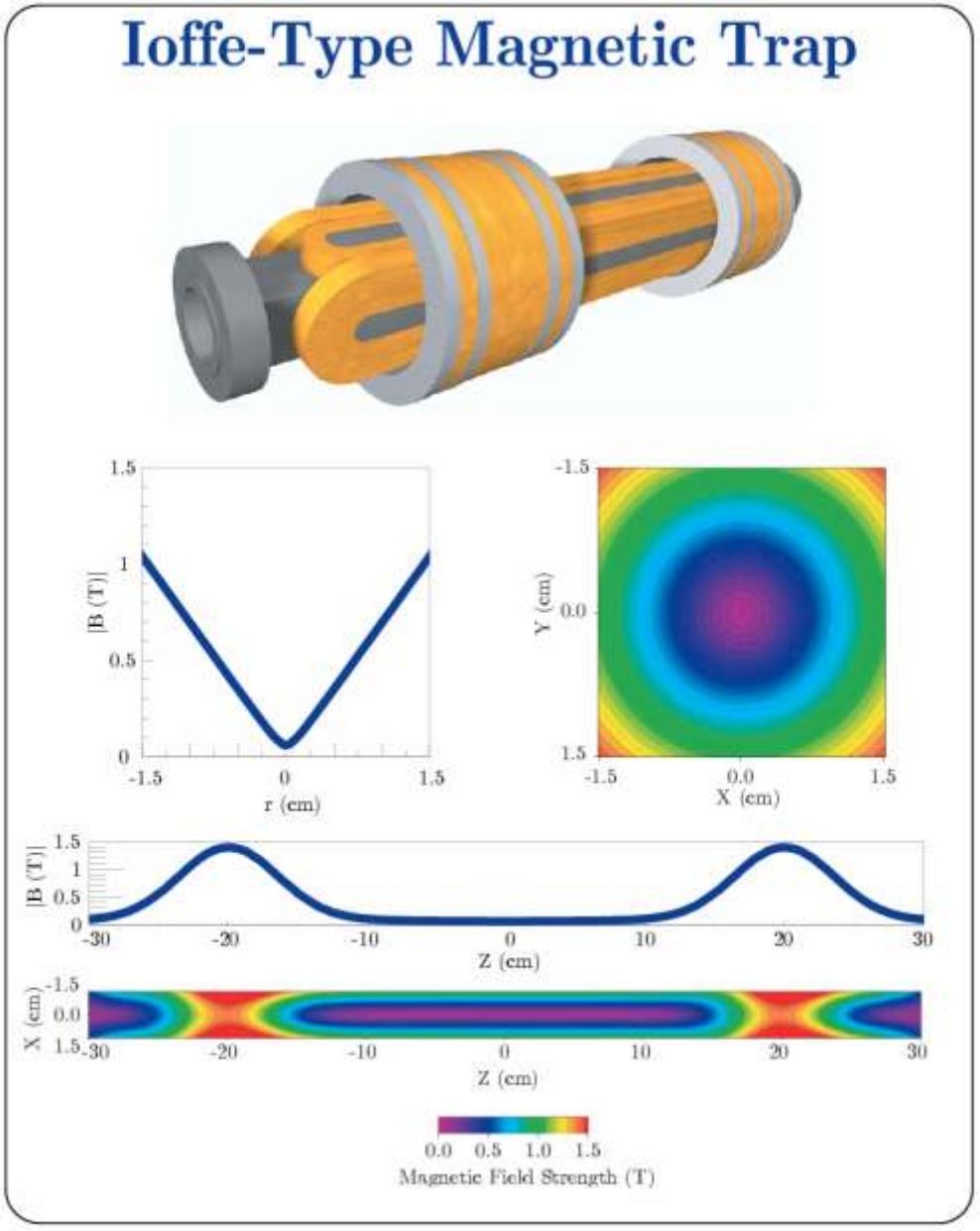

J. Phys. D: Appl. Phys. **32** (1999) R119–R146. Printed in the UK PII: S0022-3727(99)95361-5

Magnetic wall of Permanent magnets?

REVIEW ARTICLE

Magnetic atom optics: mirrors, guides, traps, and chips for atoms

E A Hinds and I G Hughes

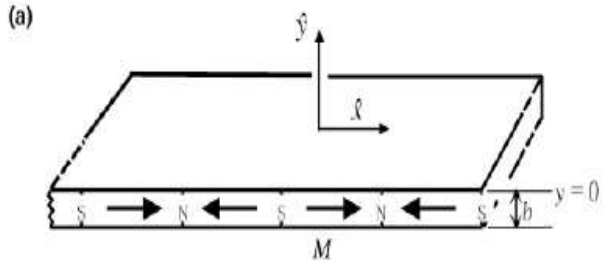

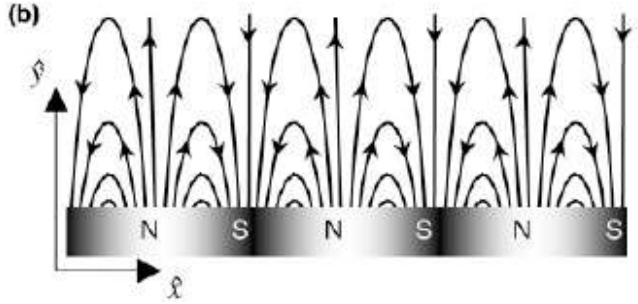

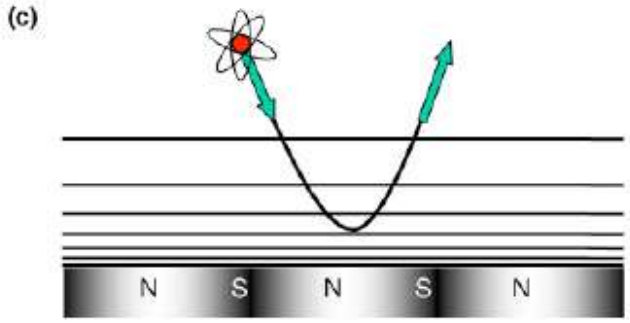

Table 1. Manufacturers' specifications for the magnetic recording media used to make atom mirrors.

Recording medium	Remanent field (G)	Magnetic layer thickness (μm)	Coercivity (Oe)
Audio-tape			
Denon HD-M	3500	4.0	1200
$5\frac{1}{4}$ inch floppy disk			
Sony MD-2D	700	2.5	290
Videotape			
Ampex 398 Betacam SP	2300	3.5	1500

Magnetic wall for neutrons

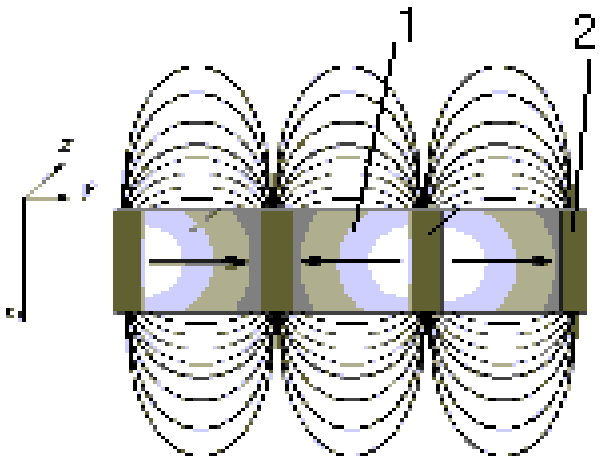

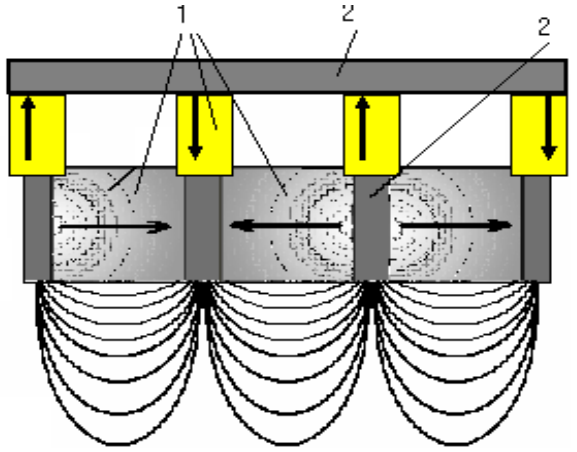

1 – permanent magnet
2 – magnetic field guide

- V.F.Ezhov,[1] A.Z.Andreev,[1] G.Ban[2] B.A.Bazarov,[1] P.Geltenbort,[3] F.J.Hartman,[4] A.G.Glushkov,[1] M.G.Groshev,[1] V.A.Knyazkov,[1] N.A.Kovrizhnykh,[5], O.Naviliat-Cuncic,[2] V.L.Ryabov.[1]

- 1 - Petersburg Nuclear Physics Institute, Gatchina, Russia.
- 2 - Caen University, France
- 3 - Institut Laue-Langevin, Grenoble, France.
- 4 - Technical University, Munich, Germany.
- 5 - Research Institute of electrophysical apparatus, S-Petersburg, Russia.

Development of our experimental strategy (step by step)

- Creation of small trap that storage time is close to lifetime
- Investigation of main advantage i.e. “How we can measure our losses?”
  - Fomblin
  - Efficiency measuring
- Filling of trap
- Correction of the trap design

Magneto-gravitational trap

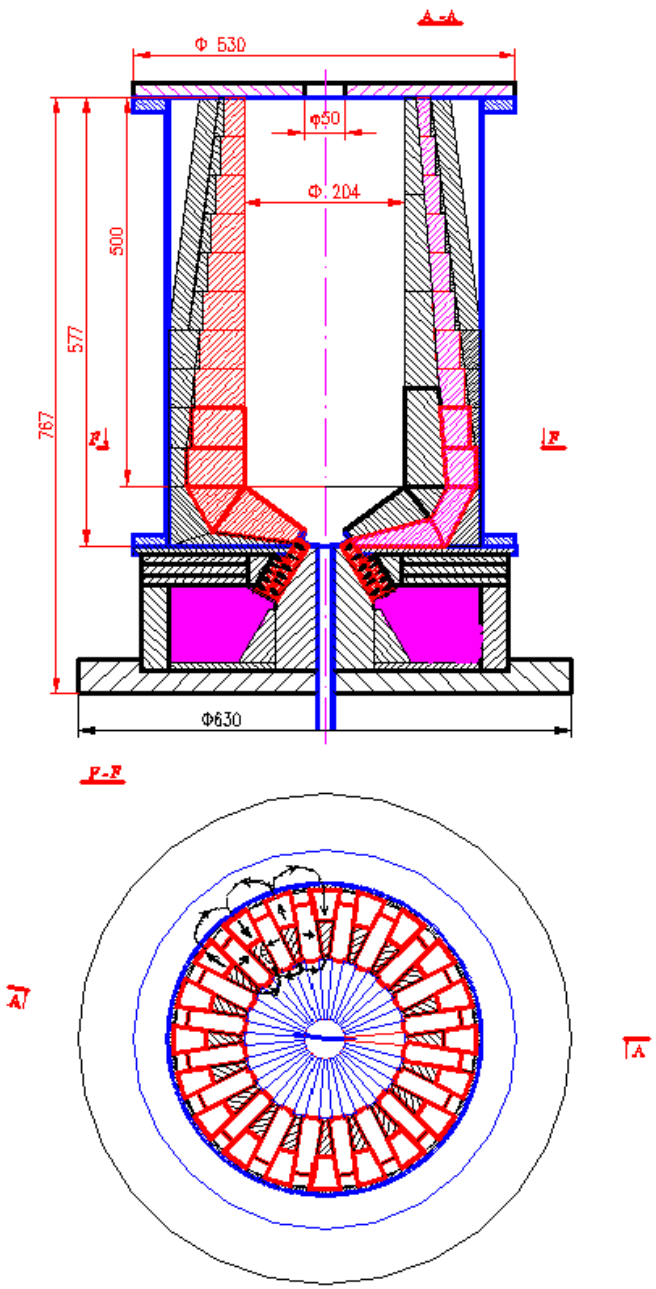

Filling through lower neutron guide

- **Neutrons heating at the moment of magnetic shutter switching on**

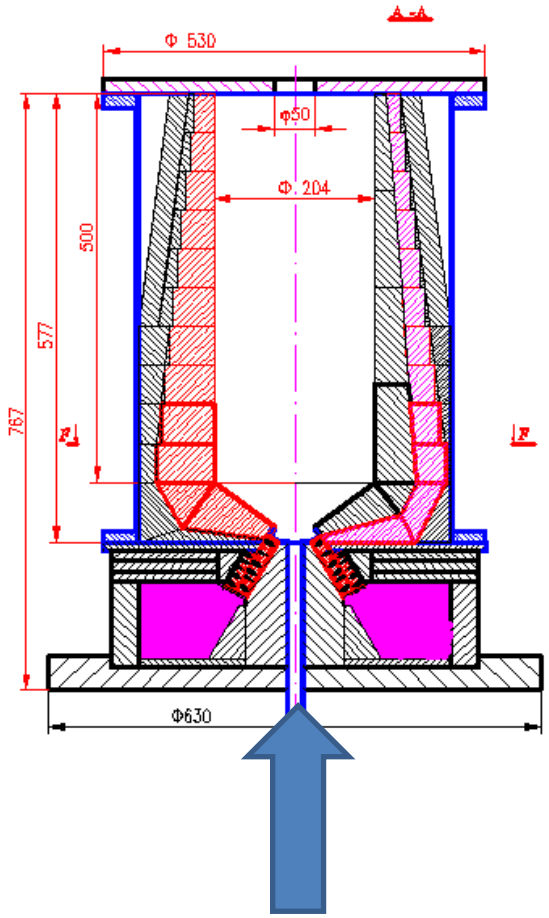

Trap filling

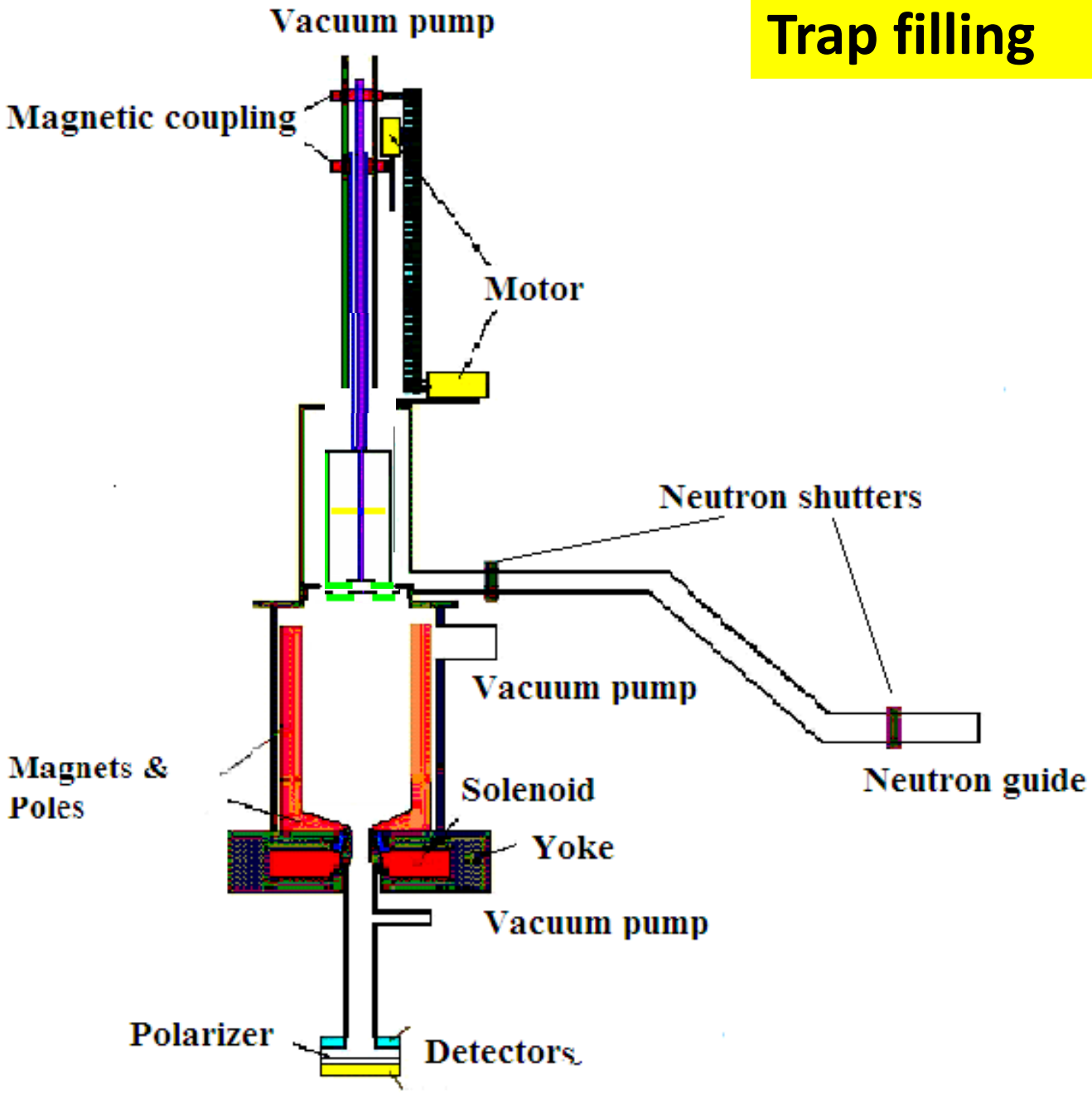

Trap filling

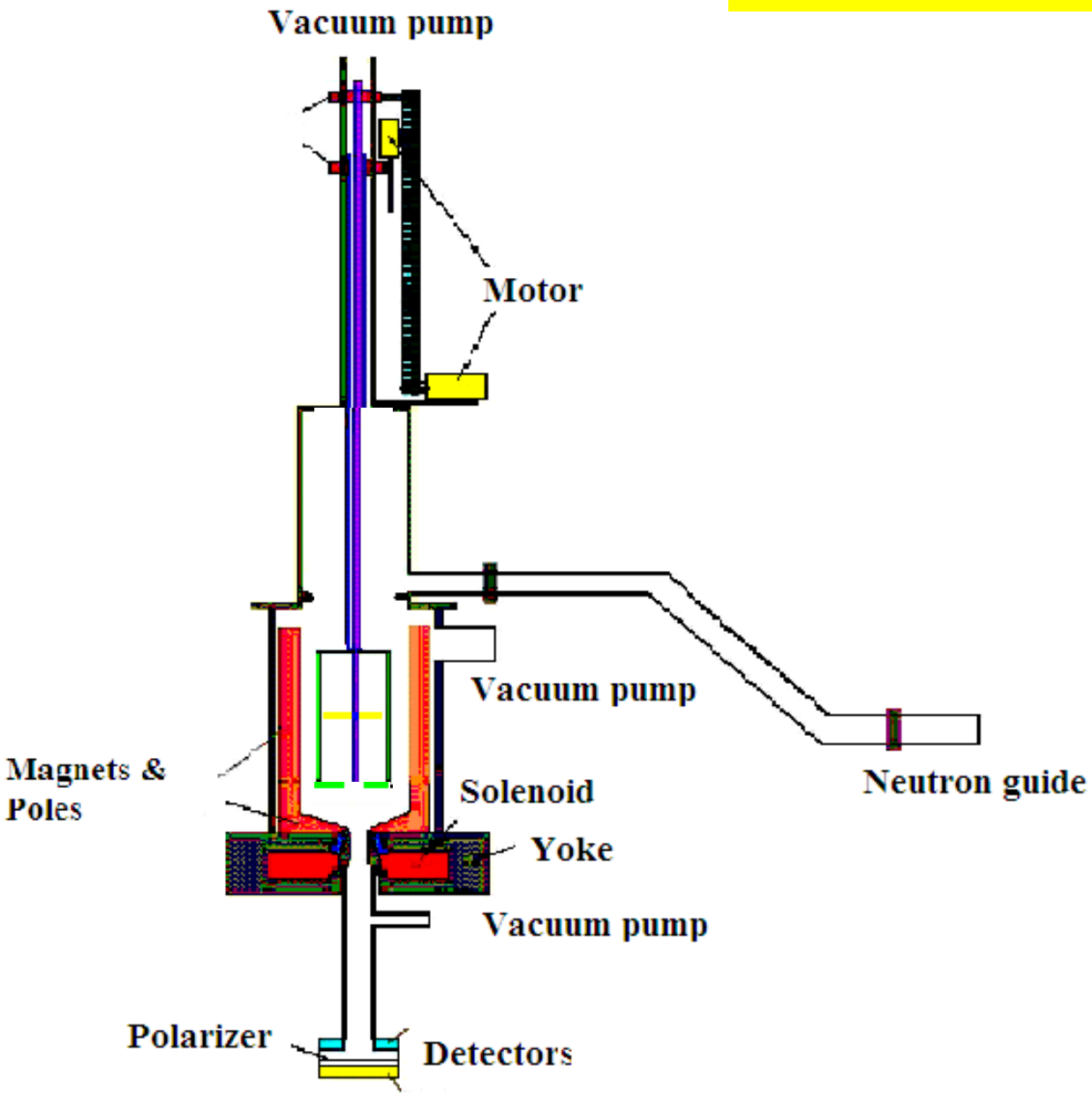

Trap filling

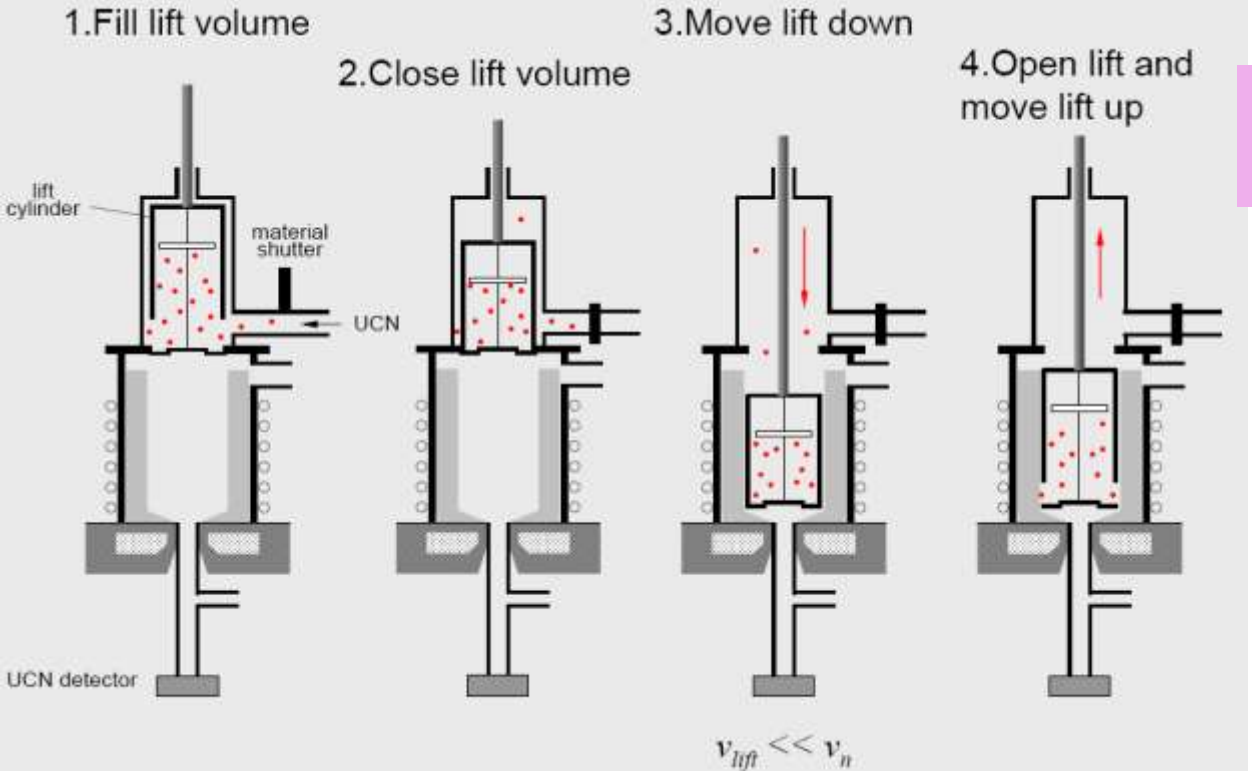

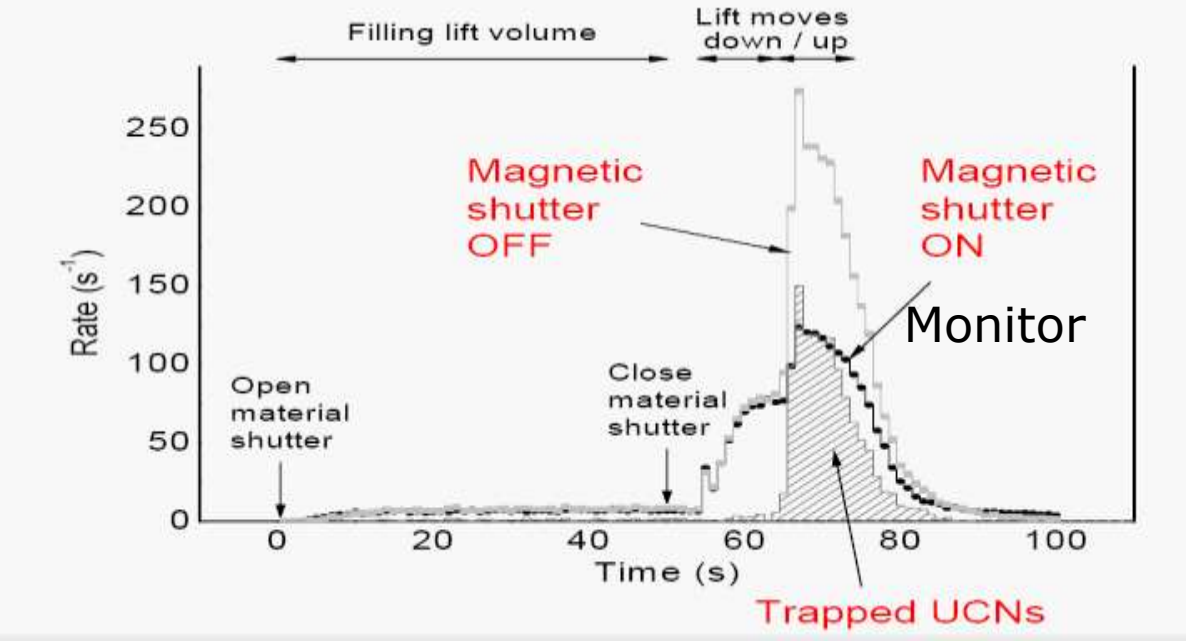

Monitor of trap filling

1. We have used: Trap filling with unpolarized UCN. In this case half of UCN will be detected just during the filling

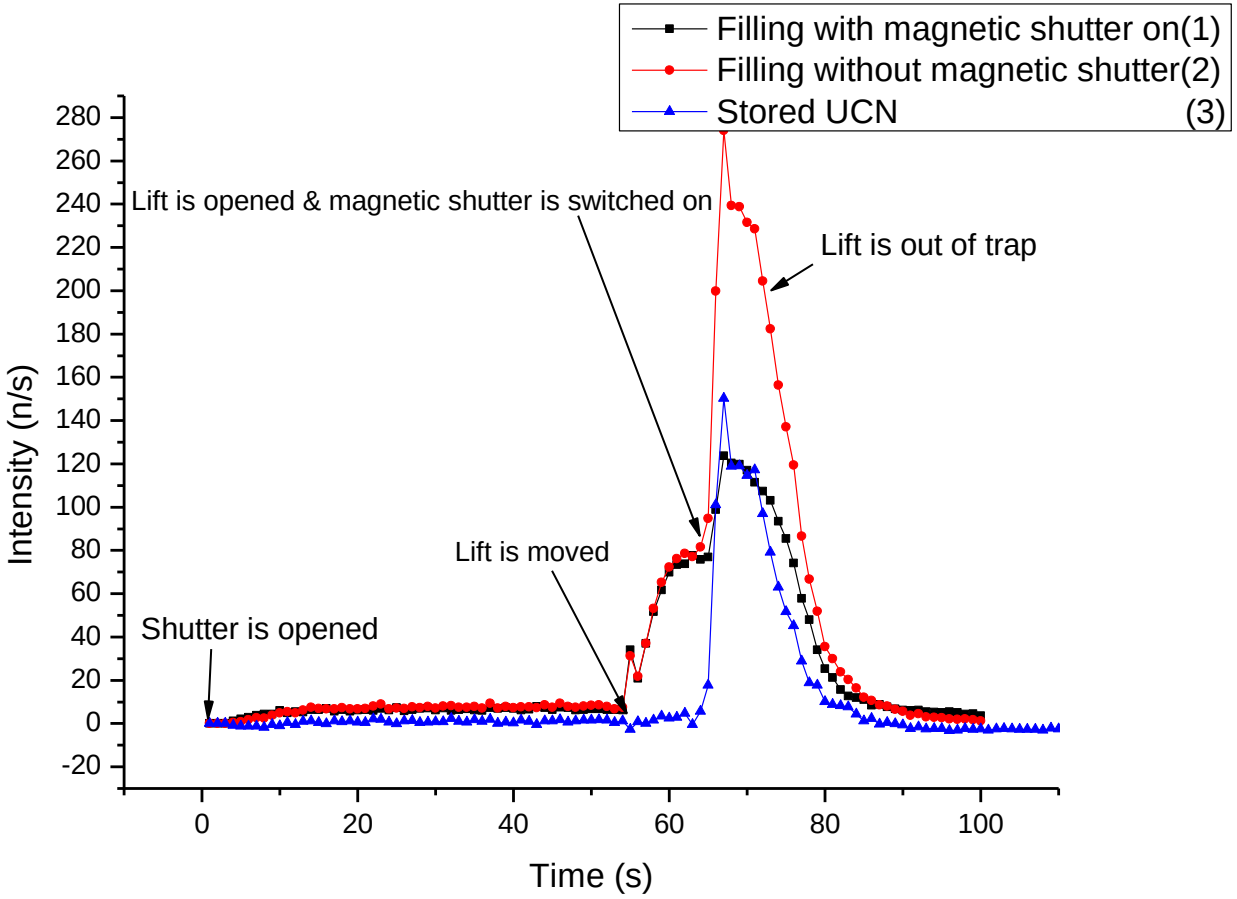

Control of the spin flipped UCN

- To control the spin flipped UCN the inner trap walls are covered with thin layer of fomblin that reflects spin flipped UCN. After some collisions (order of some 10-th) the spin flipped UCN penetrate through the magnetic barrier of solenoid and are detected by the UCN detector installed below the solenoid. Hence this intensity may be used as the detector of UCN losses during storage time.

Efficiency of spin flipped neutron collection (direct measuring using artificial depolarization)

$$\varepsilon = \frac{\sum_{t_i=301}^{1000} (N_1(t_i) - N_2(t_i)) \cdot e^{\frac{t_i - 300.5}{\tau_{decay}}}}{\sum_{t_i=1001}^{1100} (N_2(t_i) - N_1(t_i)) \cdot e^{\frac{t_i - 300.5}{\tau_{decay}}}}$$

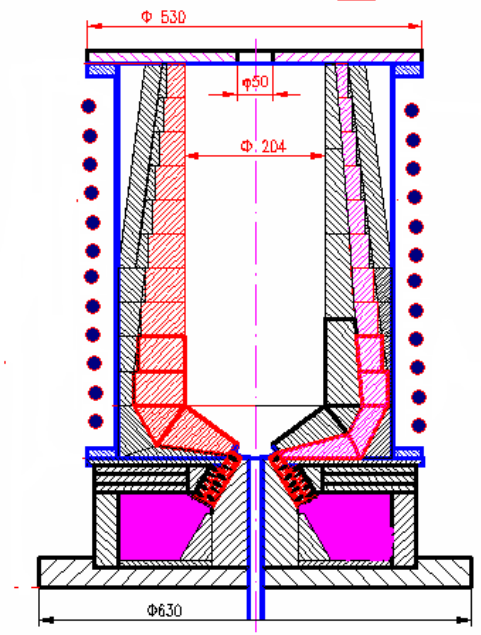

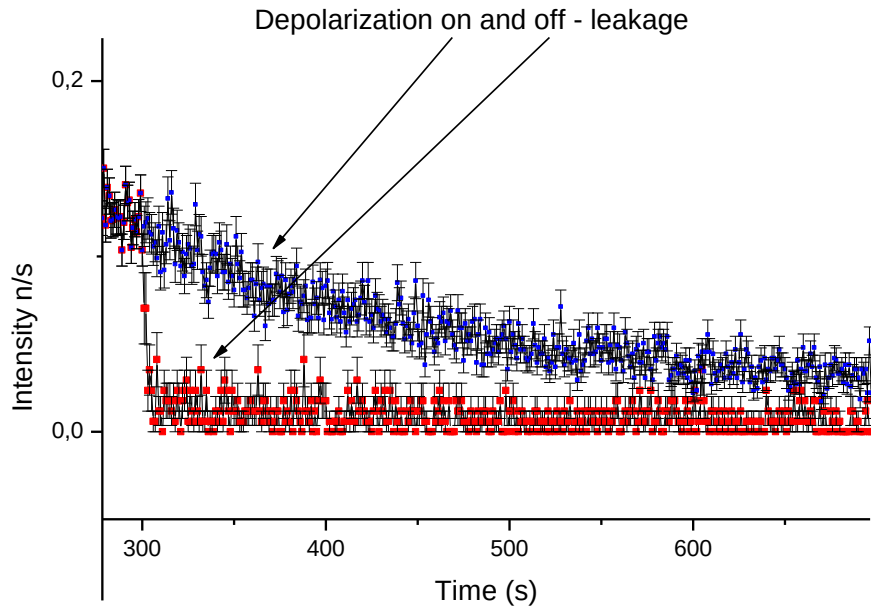

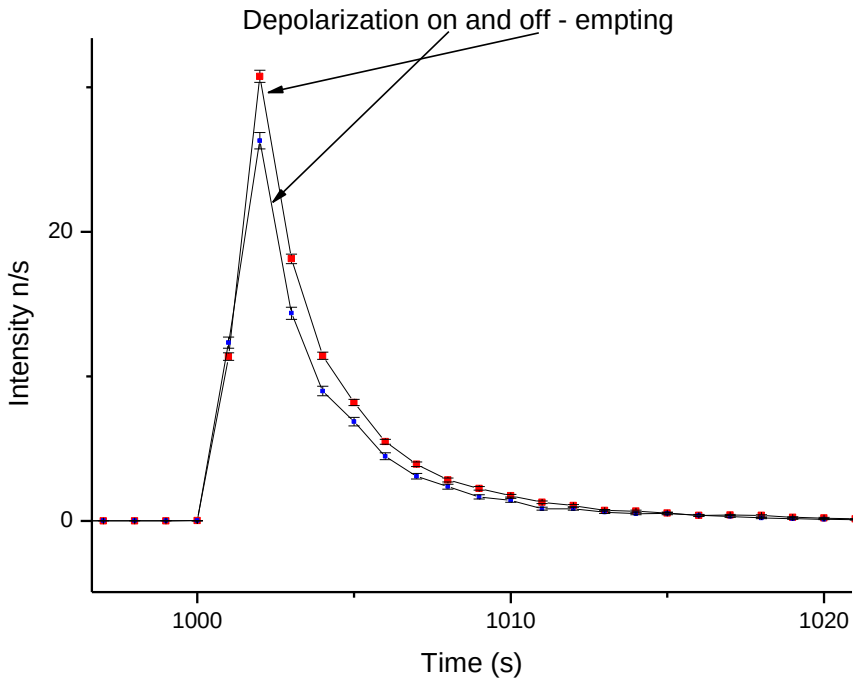

Vacuum dependence (rest gases)

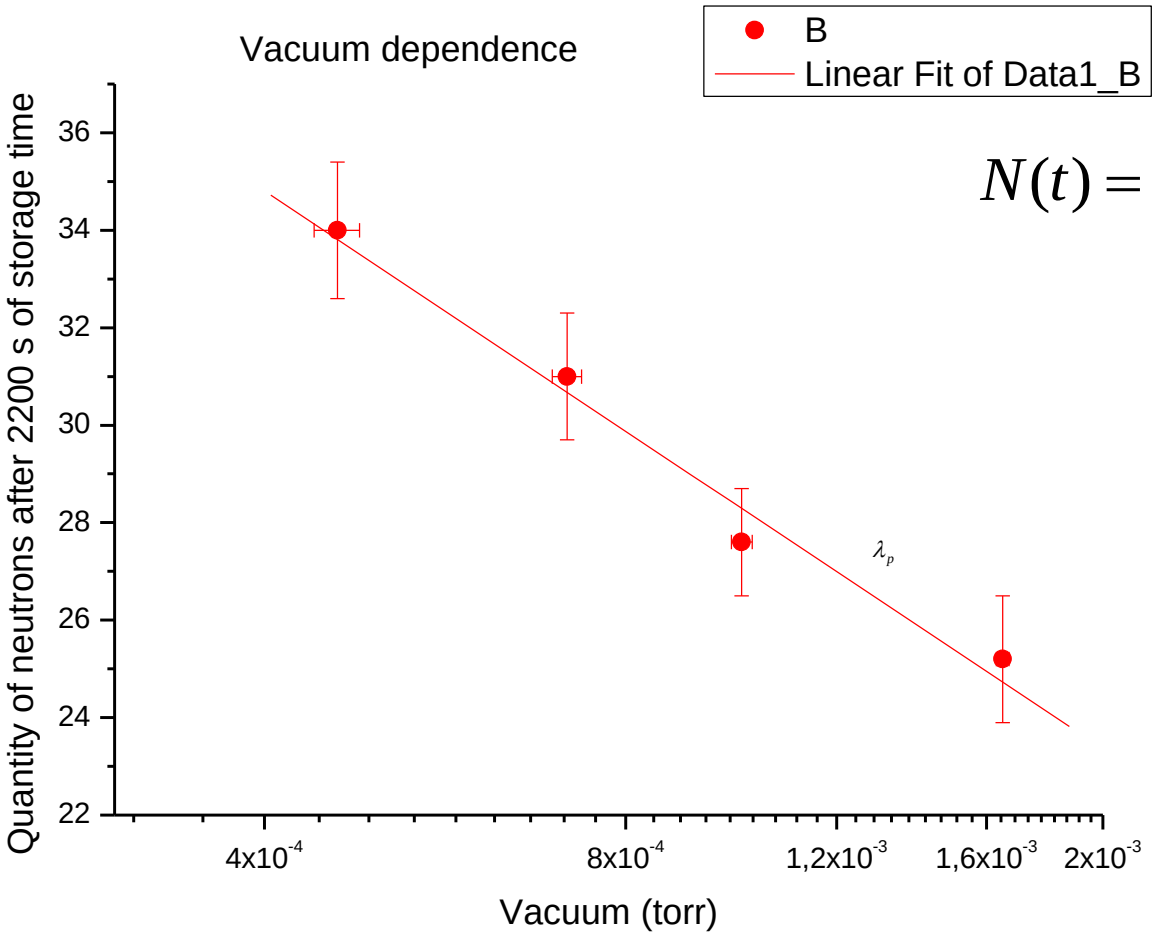

$$N(t) = N0\exp((-\lambda_{decay} - \lambda_p p)t)$$

$$\lambda_p p \ll \lambda_{decay}$$

$$\lambda_p = \frac{\ln\left(\frac{N_1(t)}{N0_1}\right) - \ln\left(\frac{N(t)}{N0}\right)}{t(p - p_1)}$$

$$\lambda_p = 0.15 \pm 0.04 \ {}^{1}\!/_{s \cdot torr}$$

$$\lambda_{decay} = 1/880 = 0.00113 \ 1/s$$

$$p \Rightarrow 10^{-6} \text{ torr}$$

Fomblin vapor scattering?

Calibration

Fomblin spectrum under 98 C

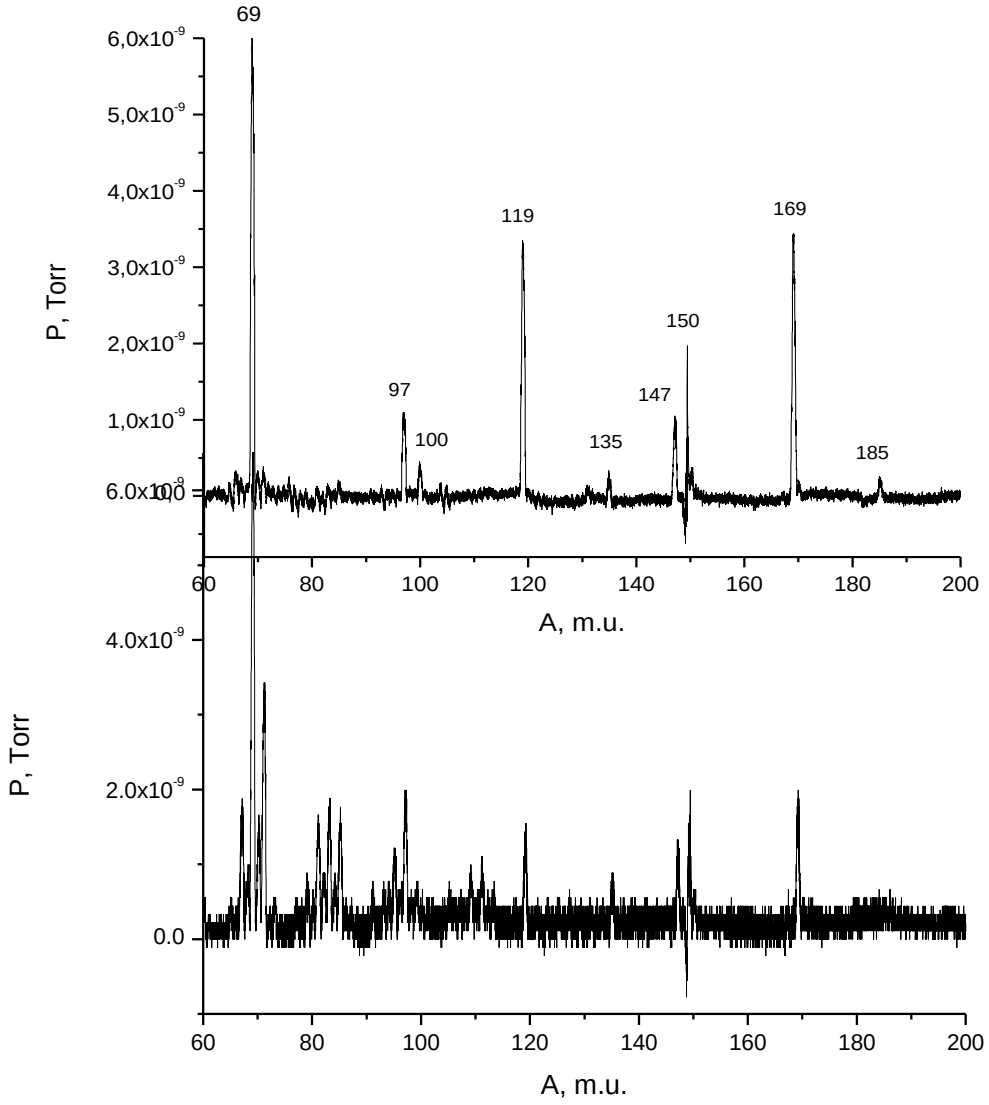

Spectrum of the rest vapor in the trap

Cleaning of the neutron spectrum

Comparing cleaning time with forced spin flip and without (no normalized data)

Cleaning with depolarisation is switched on

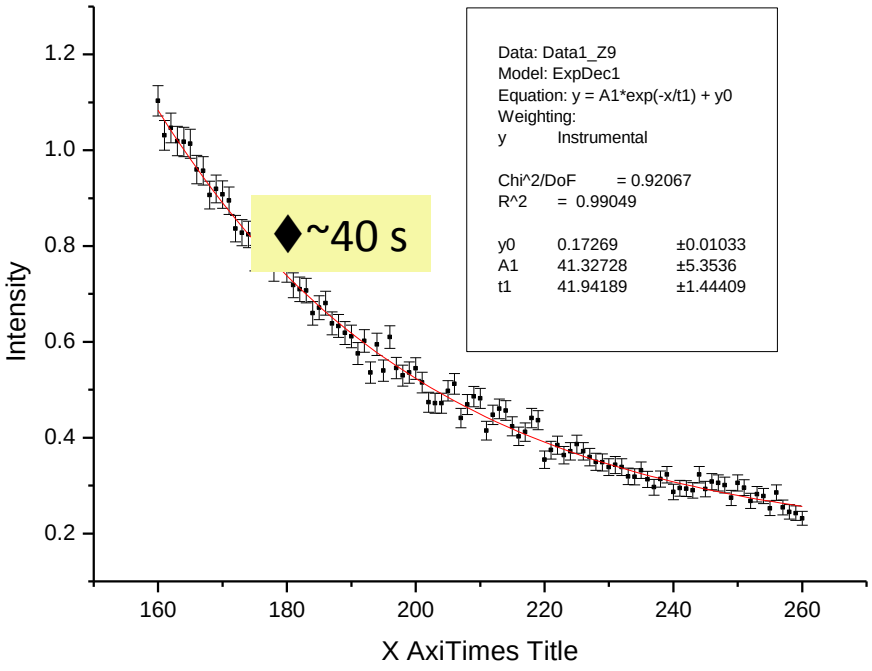

Cleaning with depolarisation is switched off

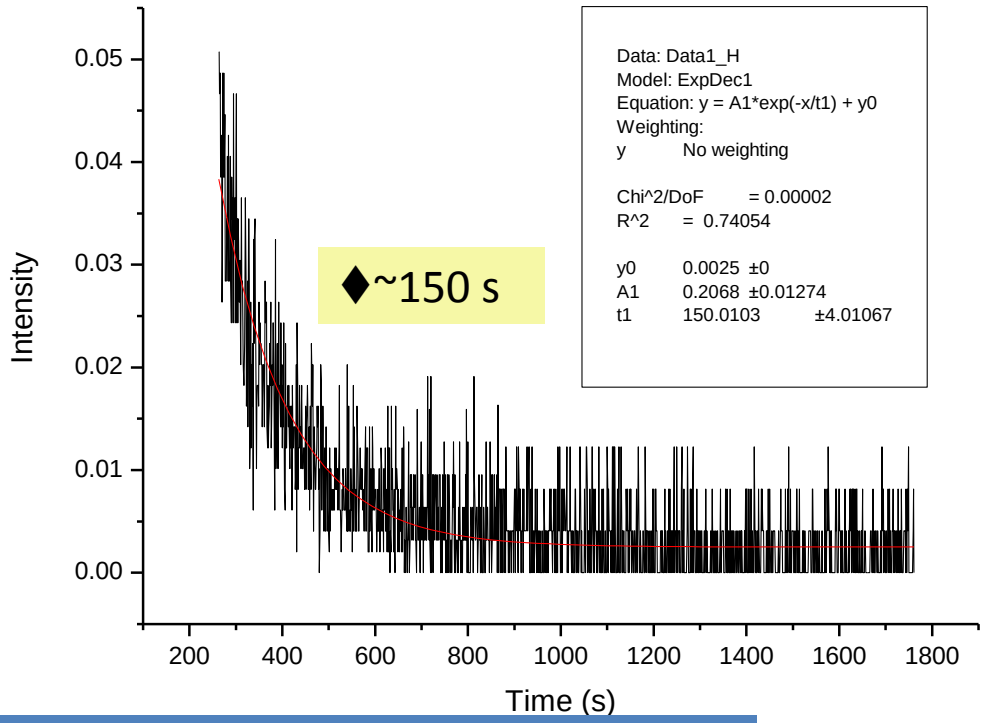

Depolarization accelerates cleaning time about 3 times

Criterion of sufficient cleaning time – the absence of efficiency changing

Income of efficiency

In case of constant value of ε

$$\lambda_{decay} = \frac{1}{T} ln\left(\frac{N_{trap}(T)}{N_0}\right)\left(1 - \left(\frac{N_{leak}(T)}{\varepsilon\left(N_0 - N_{trap}(T)\right)}\right)\right)$$

One can see that correction to λ_{decay} provided by efficiency of spinflipped neutron collection has an additional smallness in case of

$$N_{leak}(T) \ll N_0 - N_{trap}(T)$$

Approximation for ε as a constant value is a sufficiently good one for this experiment. Really losses of UCN hitting the wall depend on neutron velocity but spinflipped neutrons (just these neutrons can be lost) are accelerated in magnetic gradient before their hitting a wall. The field near the wall of trap is about 1 T, but the field used in lower magnetic shutter (just this field determines highest energy of stored UCN) is only 0.45 T. It means that velocity interval of UCNs hitting the wall after their acceleration in magnetic field gradient lays in very narrow velocity diapason (between 3.4 and 3.9 m/s). So one can use mean value ε as a constant with a good accuracy.

LIFETIME MEASURING

RUN A:

- the aperture of the UCN guide inside the magnetic shutter was Ø20 mm and without the forced depolar-ization (two points)
- Storage time

$$\tau_{st} = 874.6 \pm 1.7 \text{ s}$$

- After correction using ε =0.903 ± 0.007 from run B

$$\tau_n = 878.3 \pm 1.9\ s$$

RUN B:

- the aperture of the magnetic shutter was enlarged to Ø60 mm and the outer solenoid was used to induce the forced spinflip
- First emptying was done after 400 s and storage times before the second were equal to 600, 900, 1400 and 1800 s.
- ε =0.903 ± 0.007.

$$\tau_n = 878.2 \pm 1.9\ s$$

MEASUREMENT OF THE NEUTRON LIFETIME WITH ULTRA-COLD NEUTRONS STORED IN A MAGNETO-GRAVITATIONAL TRAP

V.F. EZHOV, A.Z. ANDREEV, G. BAN, B.A. BAZAROV, P. GELTENBORT, A.G. GLUSHKOV, V.A. KNYAZKOV, N.A. KOVRIZHNYKH, G.B. KRYGIN, O. NAVILIAT-CUNCIC, V.L. RYABOV

(SUBMITTED ON 23 DEC 2014)

arXiv:1412.7434 [nucl-ex]

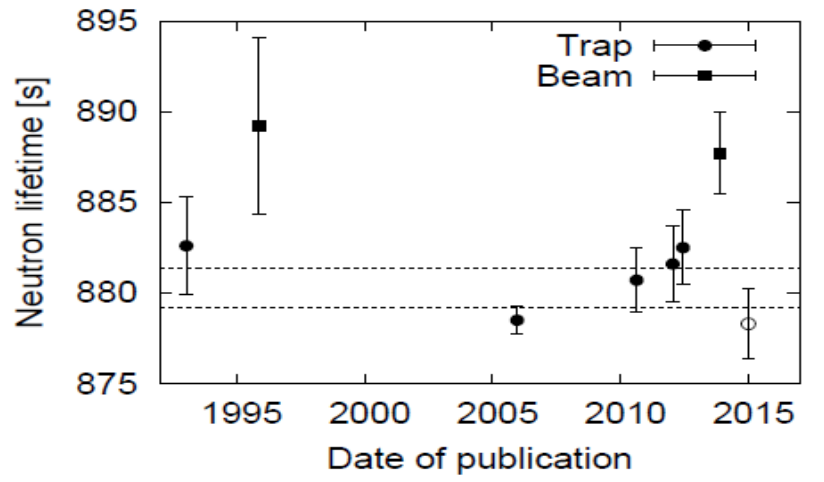

τ_n=(878.3±1.9) s.

Comparison of the value for the neutron lifetime obtained from this work (open circle) with the values included in the current PDG average (filled squares and circles). The dotted lines indicate the $\pm 1\sigma$ limits of the current average.

Unsolved problem of first trap

- Interference of shutter and wall magnetic fields
- To exclude it we have to decrease the shutter magnetic field to 2 times (0.45 T instead of 1 T)

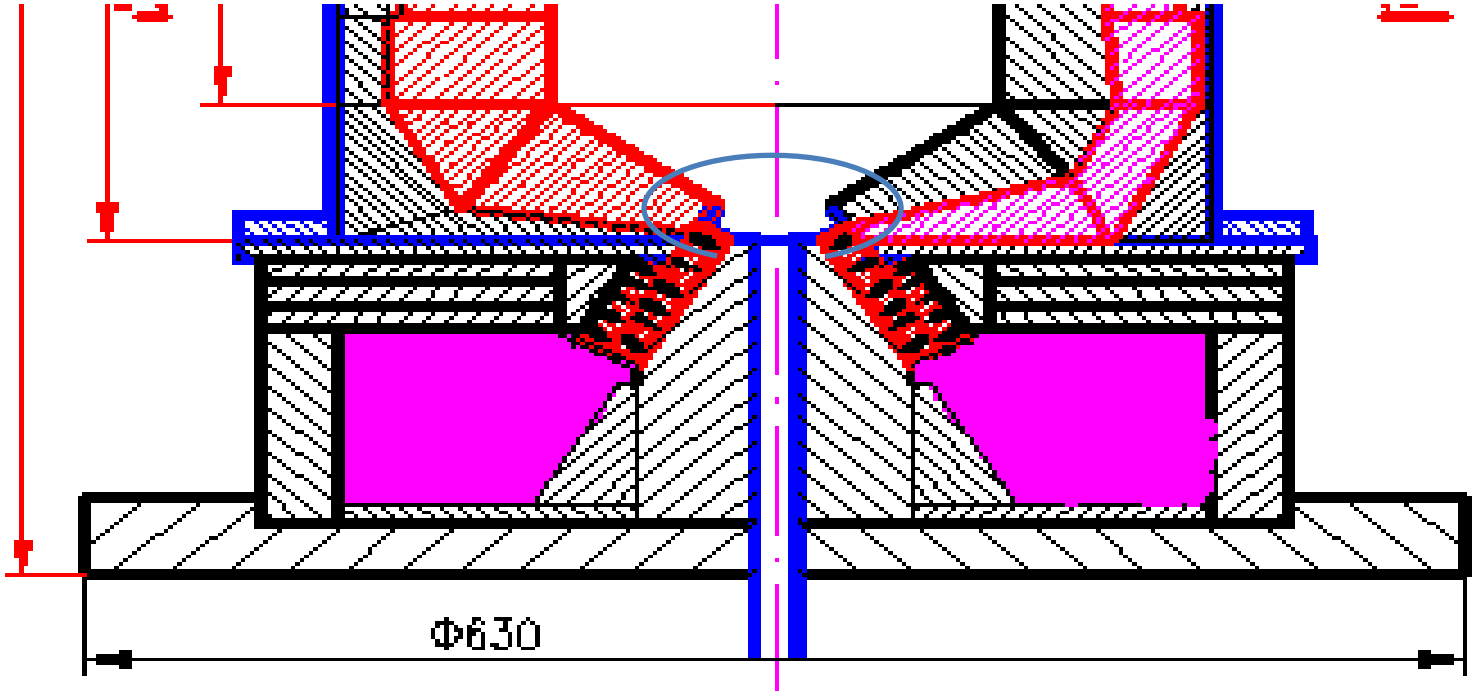

$$\vec{B}_z = \vec{B}_0 e^{-kz}$$

Is it possible to create ideal trap?

$k(x)$ **Depend on period of magnetic structure**

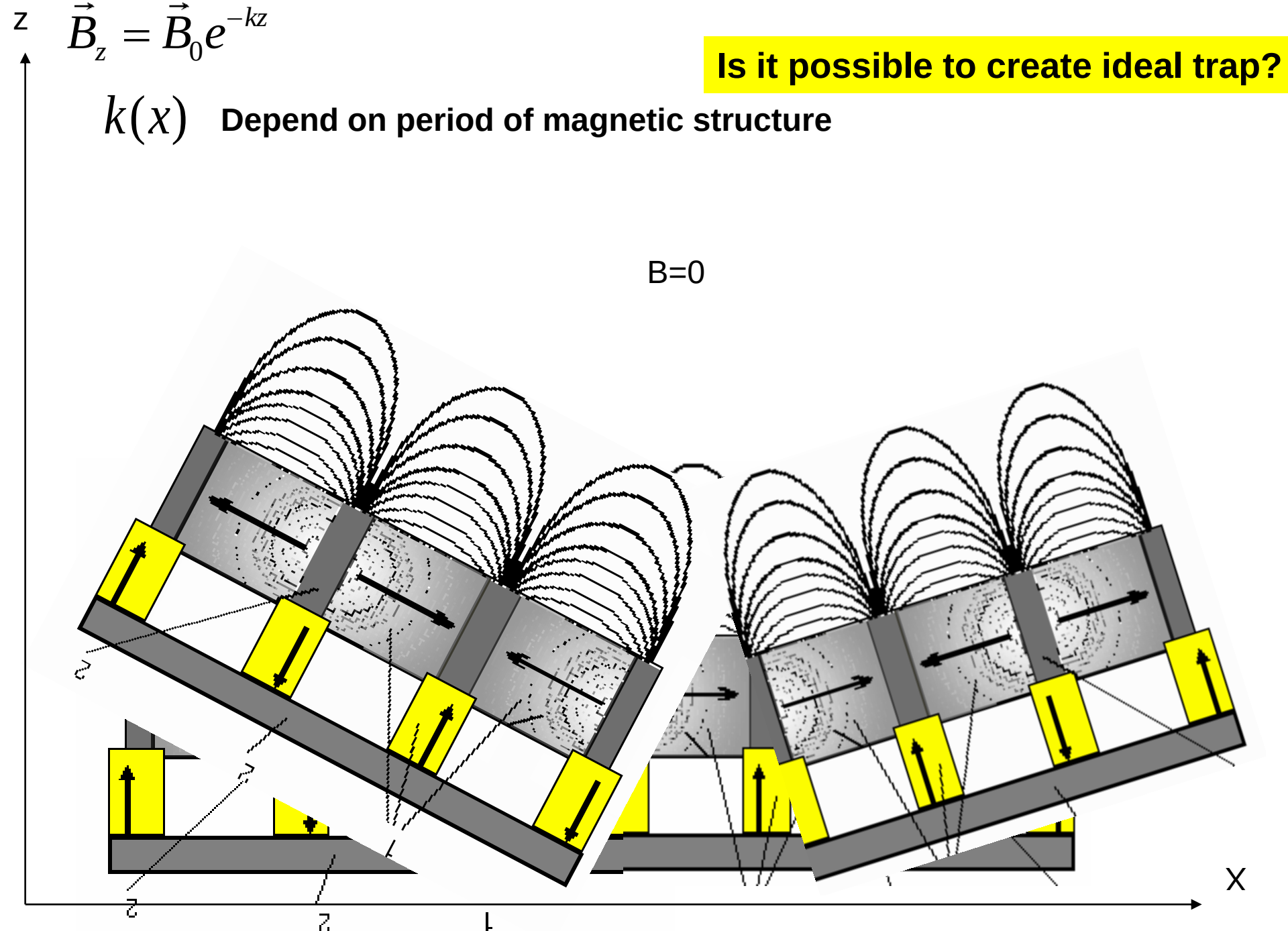

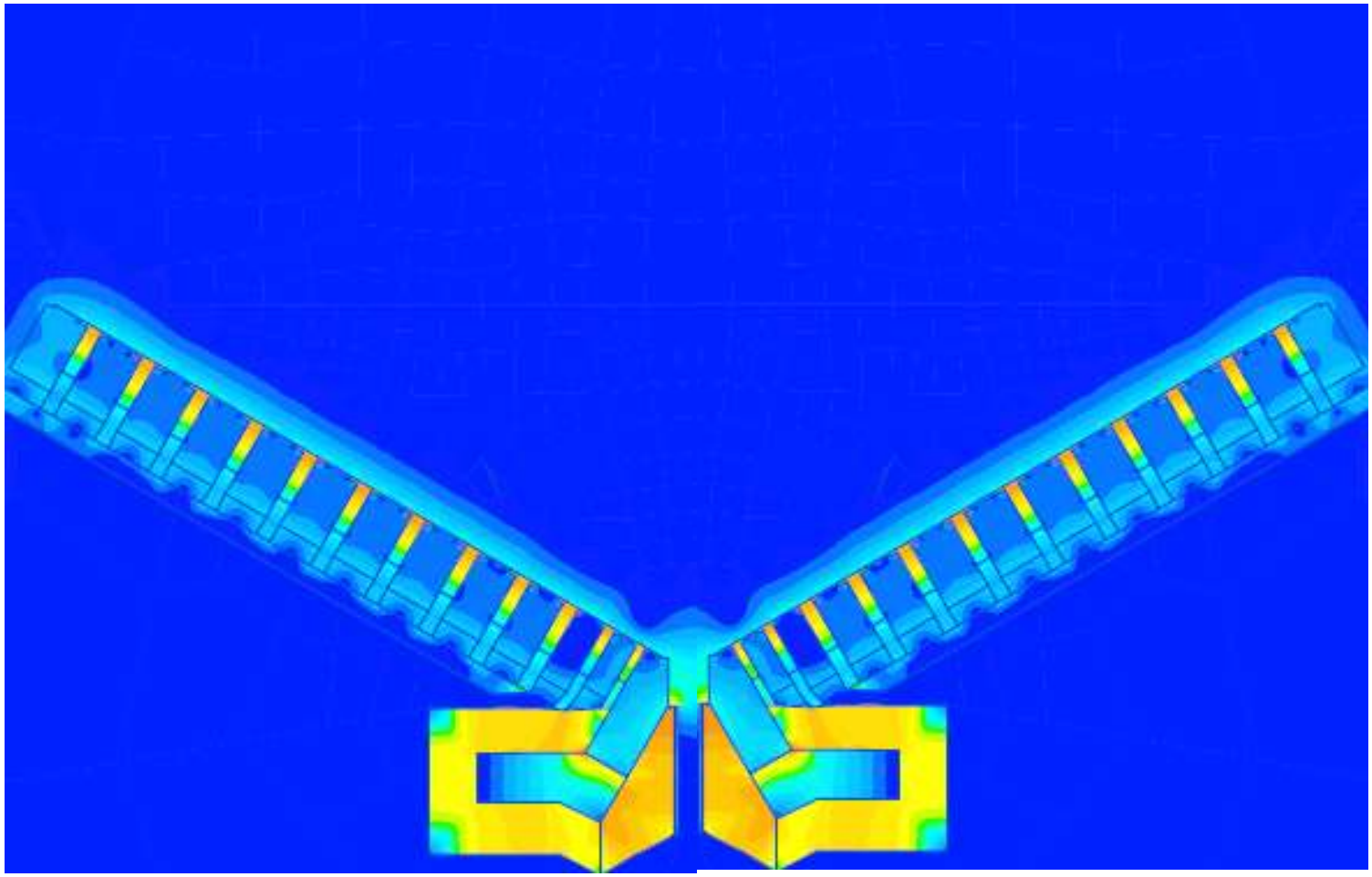

Calculated map of magnetic field for a new trap

Increasing of volume about 15 times

Increasing of stored UCN quantity due to boundary velocity increasing is about 8 times

Our waited accuracy about 0.2-0.3 s.

Trap design

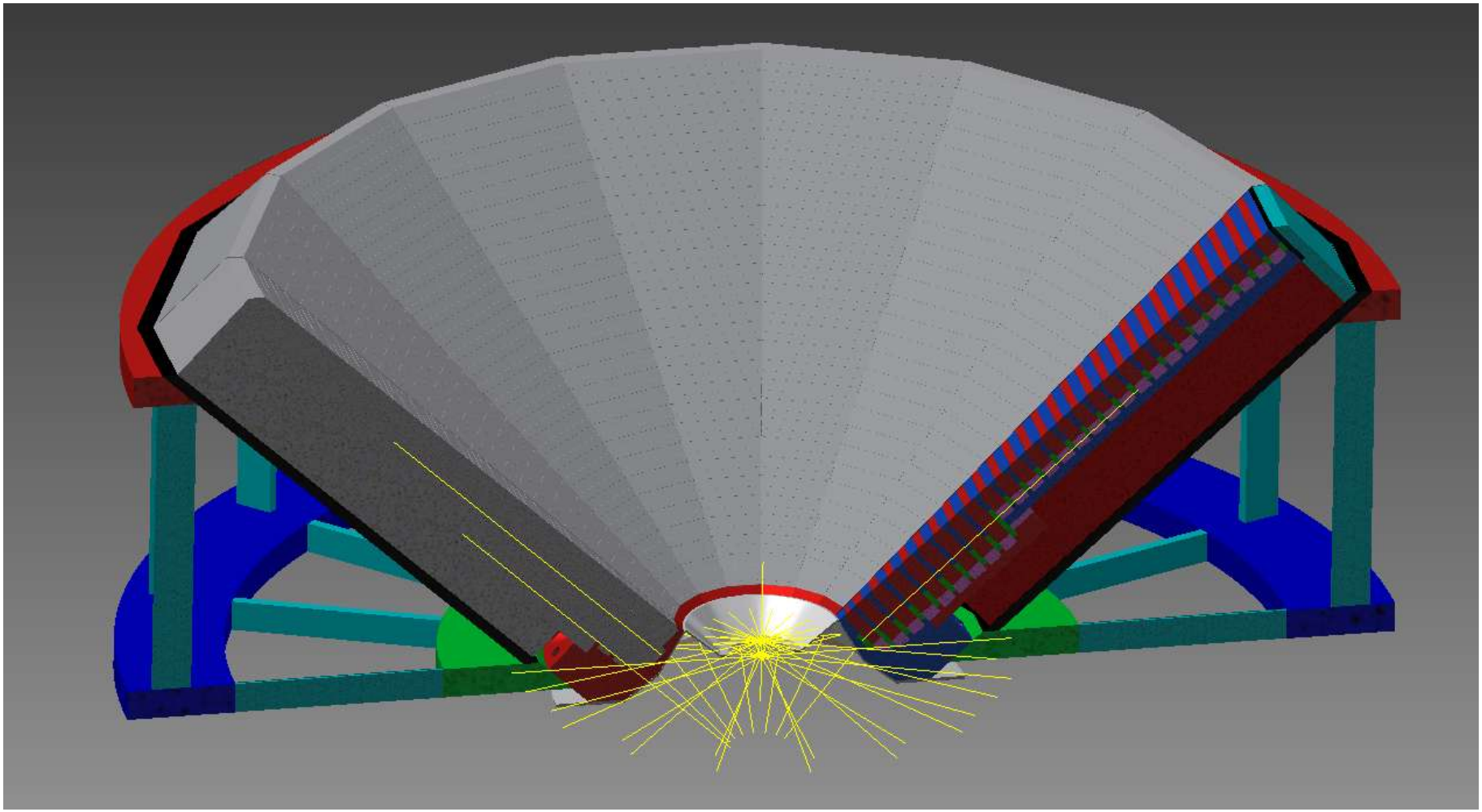

Vacuum chamber and filling system for new trap (ILL, Level D)

Munich project

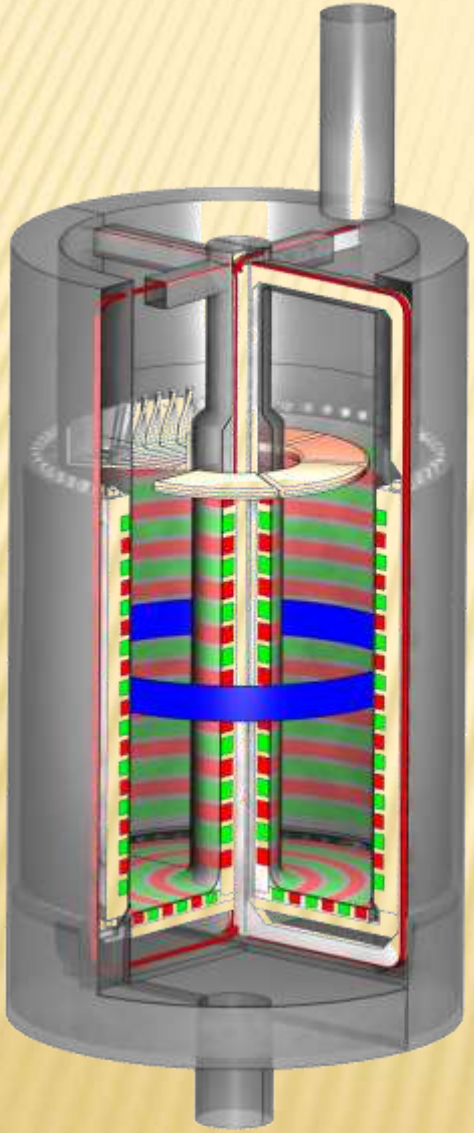

PENeLOPE, a superconducting magneto-gravitational UCN trap for a precise neutron lifetime measurement

I. Altarev, B. Franke , E. Gutsmiedl, F. J. Hartmann, S. Materne, S. Paul, R. Picker,
Physik-Department E18, Technische Universit Munchen, D-85748 Garching

UCN will be trapped in a multipole field of a flux density up to 2 T and will be bound by gravitational force at the top. This makes the extraction and detection of the decay protons possible and allows a direct measurement of neutron decay.

Accuracy of 0.1 s and better demands high storage times and good knowledge of systematic errors, which could result from neutron spin flip and high energetic UCN which leave the storage volume only slowly. Therefore, the neutron spectrum is cleaned by an absorber. The big storage volume of 800 dm3 and the expected high neutron flux of FRMII give more than 107 neutrons per filling of the storage volume and meet statistical demands.

Supported by MLL, BMBF and excellence initiative EXC 153.

Los-Alamos project

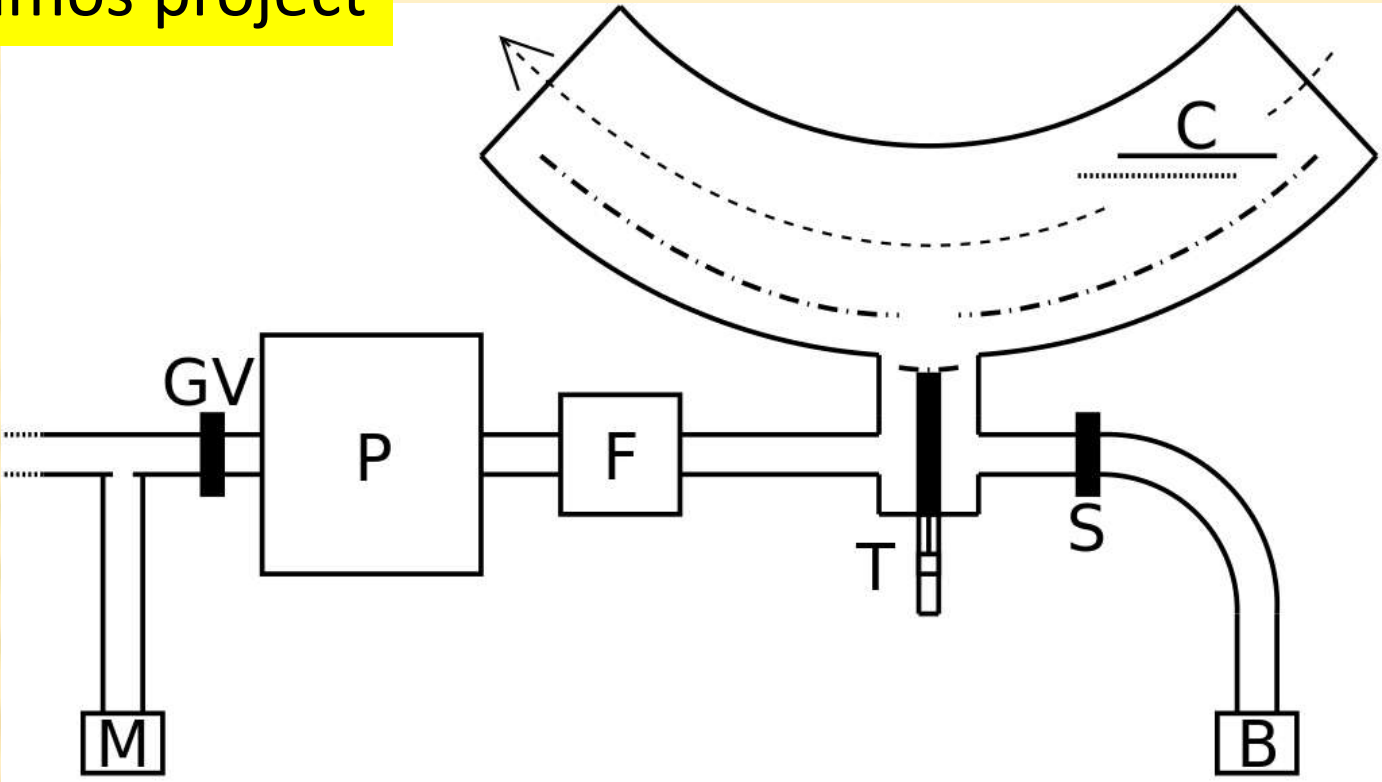

A schematic of the experiment. The UCN source density is monitored through a 1 cm aperture leading to a 3He-based proportional counter (M), or detected further downstream in the 10B counter (B). The apparatus consists of a polarizing magnet (P), a spin flipper (F), and polyethylene cleaner in raised (solid) and lowered (dotted) positions (C). There is an up-stream gate valve (GV) and down-stream aluminum shutter (S), as well as a pneumatic piston-driven magnet plate (T) which opens the bottom of the Halbach array (dash-dot) so that UCN can be loaded. The holding field follows lines parallel to the dashed arrow.

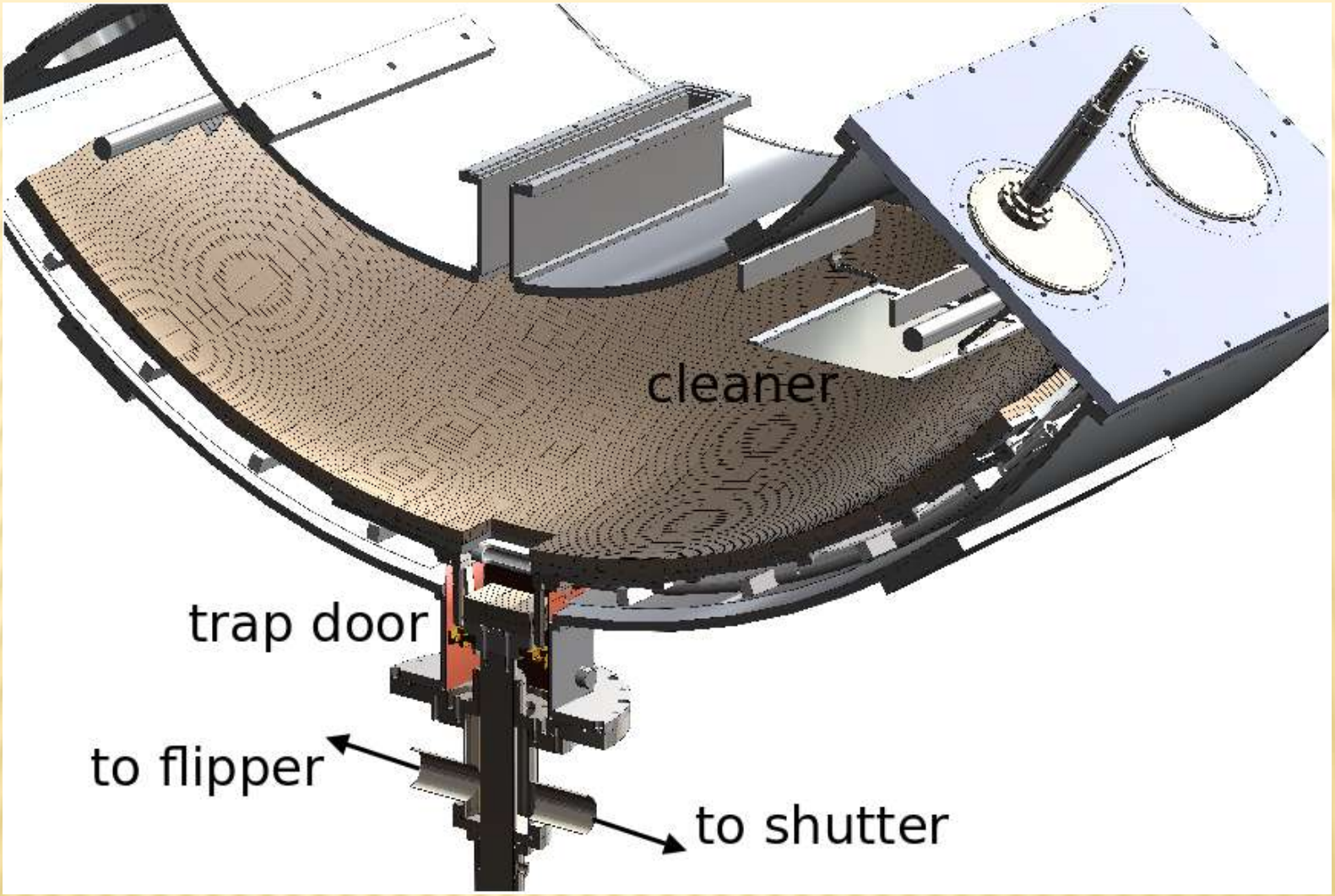

A cutaway of the apparatus. The tubular guides (7.6 cm diameter) lead to the other components. The trap door is shown in the down position, and the cleaner is shown on the right side of the trap.

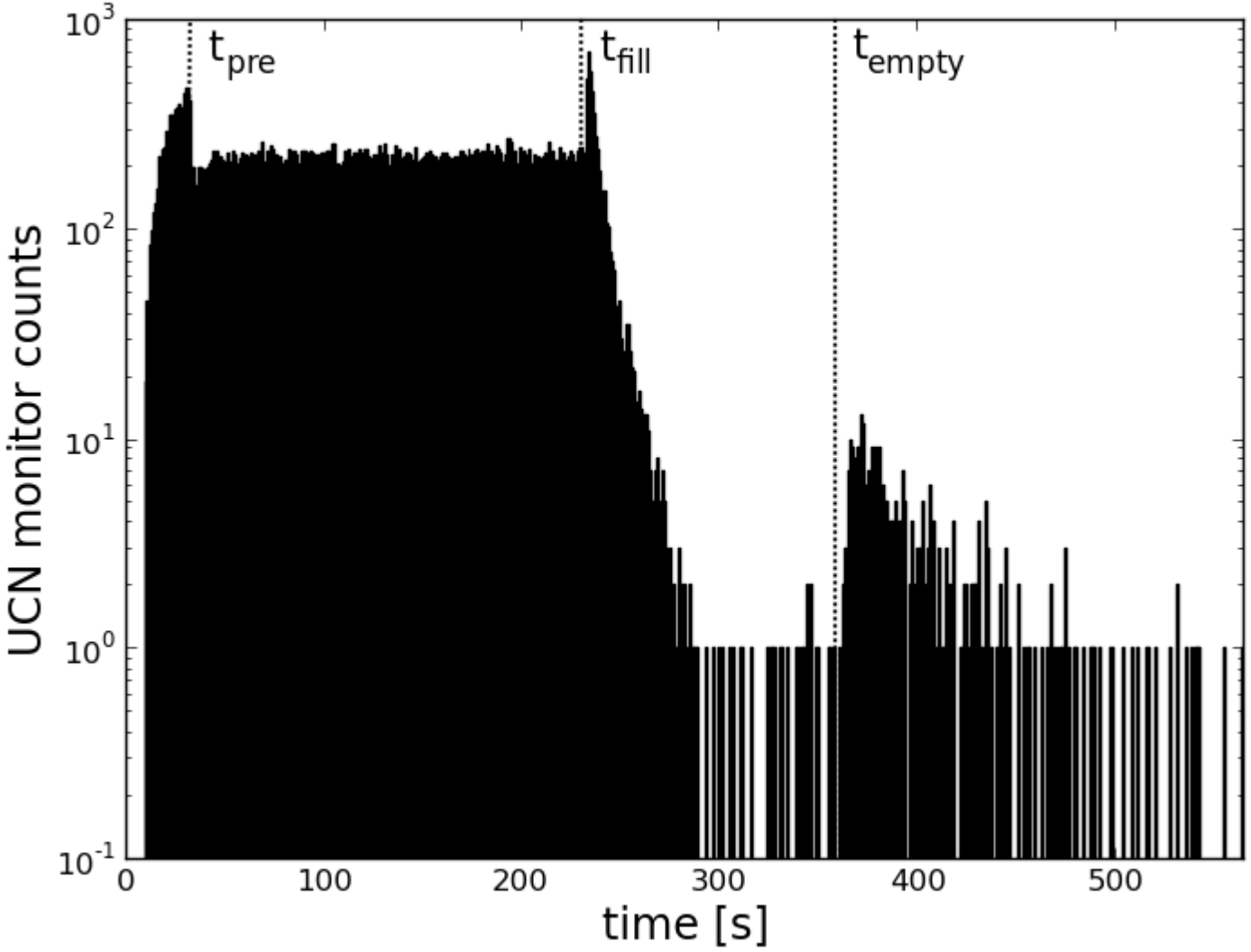

The 10B counter rate during a measurement cycle. From left to right, the vertical lines represent time tpre when the shutter is closed, tfill when the trap door is closed and shutter opened, and tempty when the trap door

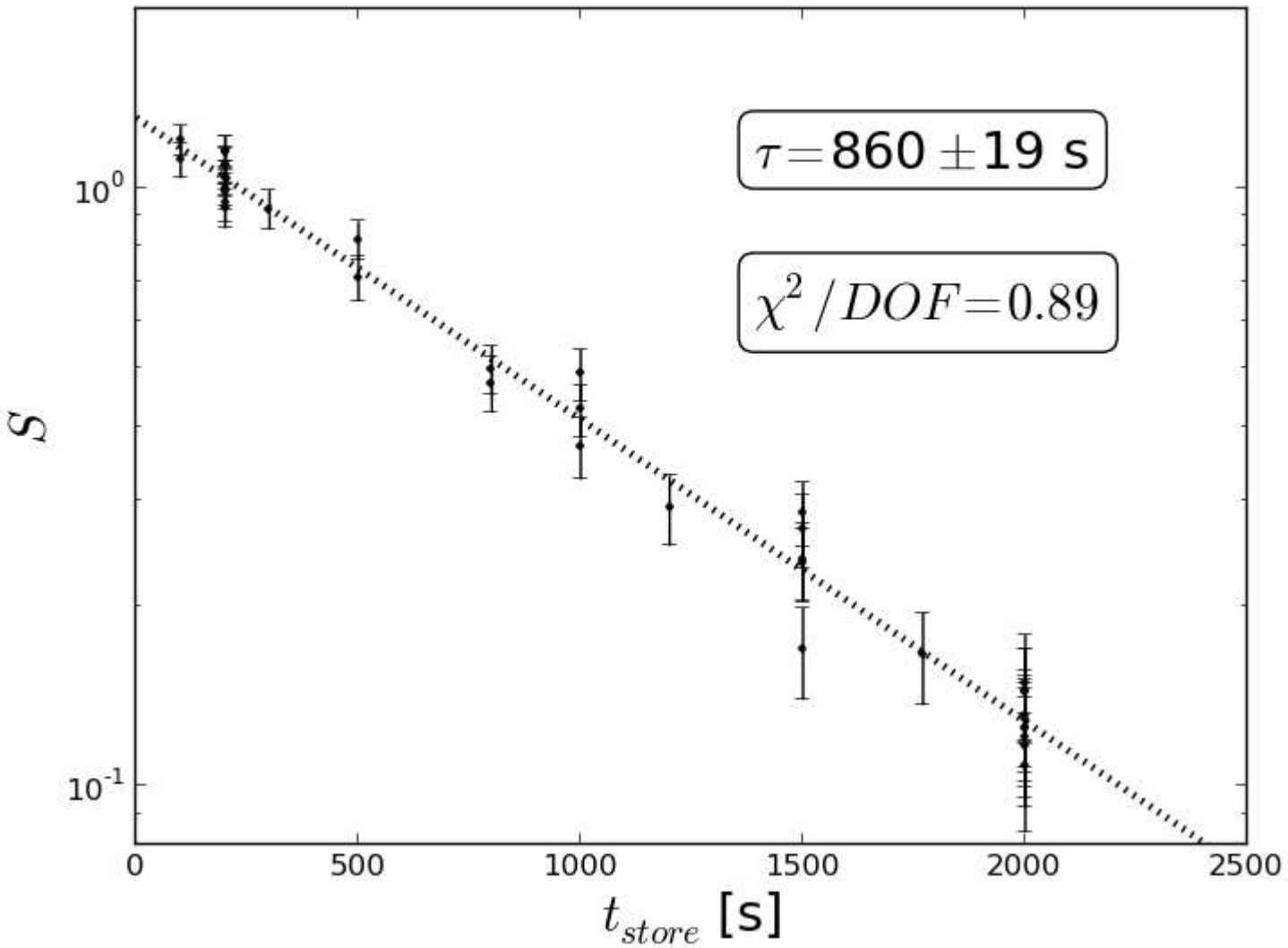

The signal S versus t_{store}. The storage time constant of the trap is given by τ_{store} from the exponential fit (upper). The distribution of residuals of the exponential fit are normalized to their statistical uncertainty (lower

Thank you for your attention

$$dN_{trap}(t) = \left(-\lambda_{decay} N_{trap}(t) - \lambda_{dep} N_{trap}(t)\right) dt$$

$$dN_{leak}(t) = \varepsilon \lambda_{dep} N_{trap}(t)\, dt$$

$$N_{trap}(0) = N_0$$

$$N_{leak}(0) = 0$$

Model of magnetic storage with leakage

$$N_{trap}(t) = N_0 e^{-\left(\lambda_{decay} + \lambda_{leak}\right)t}$$

$$N_{leak}(t) = \frac{\varepsilon \lambda_{leak} N_0}{\lambda_{decay} + \lambda_{leak}} \left(1 - e^{-\left(\lambda_{decay} + \lambda_{leak}\right)t}\right)$$

$$\lambda_{decay} = \frac{\ln\left(\frac{N_{trap}(T)}{N_0}\right)\left(\varepsilon N_0 - \varepsilon N_{trap}(T) - N_{leak}(T)\right)}{T\varepsilon\left(N_0 - N_{trap}(T)\right)}$$

$$\lambda_{dep} = \frac{\ln\left(\frac{N_{trap}(T)}{N_0}\right) N_{leak}(T)}{T\varepsilon\left(N_0 - N_{trap}(T)\right)}$$